ARCHITECTURAL OPENINGS INC. • 16 GARFIELD AVENUE • SOMERVILLE, MASSACHUSETTS 02145
PH: 617-776-9223 FAX: 617-776-9221 ● WEB SITE: www.archop.com

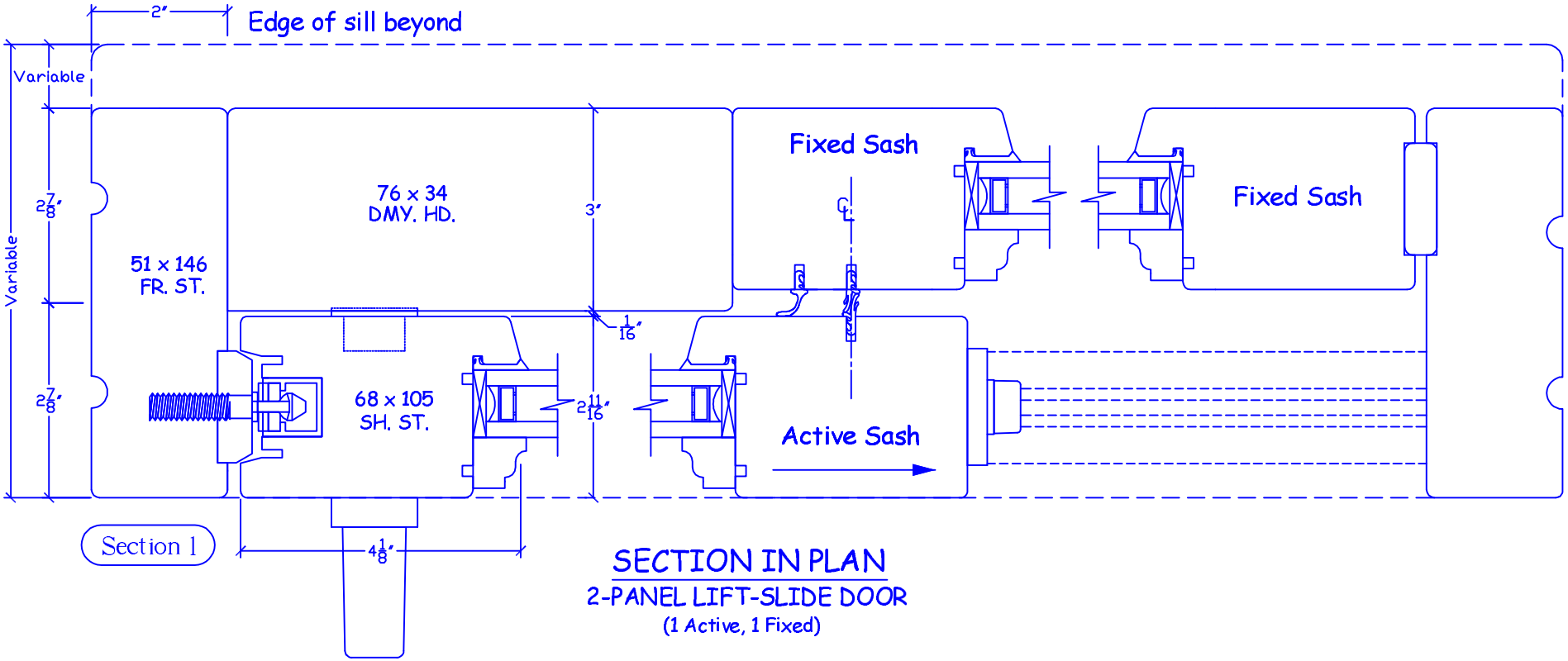


SECTION IN PLAN
2-PANEL LIFT-SLIDE DOOR
(1 Active, 1 Fixed)

| DATE: 8/7/02 | DESCRIPTION: 2-Panel Lift-Slide Door Unit - Section in PLAN | SCALE: NTS |
|---|---|---|